ATAS Controller by JG1BVX

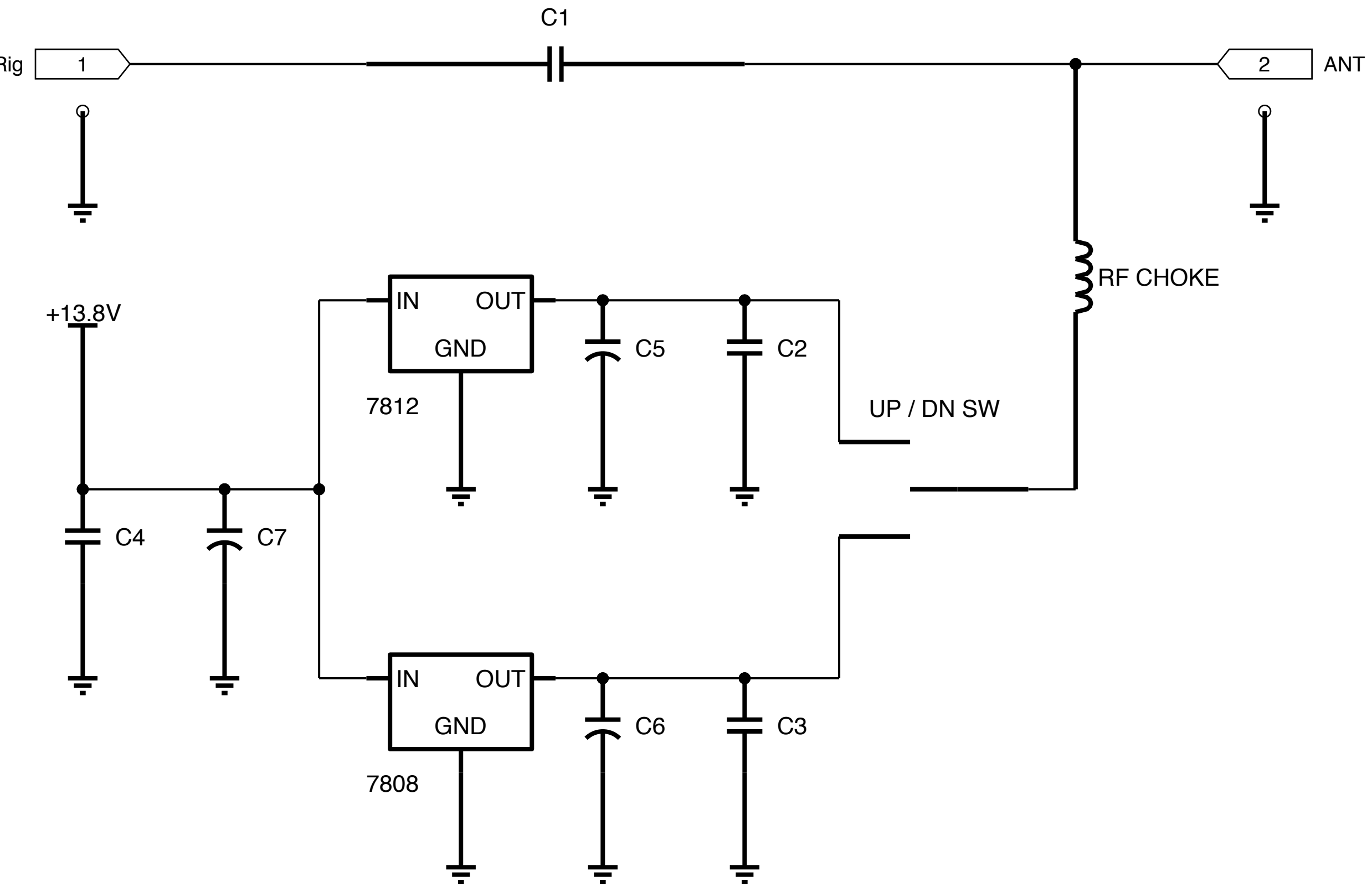

C1:0.1uF / 2kv
C2-C4:0.1uF / 25v
C5-C7:10uF / 25v (Electolytic Capacitor)
RF CHOKE: 100uF